**Sales Code:** BIN421F

**Description:** Freestanding Bath Shower Mixer With Kit

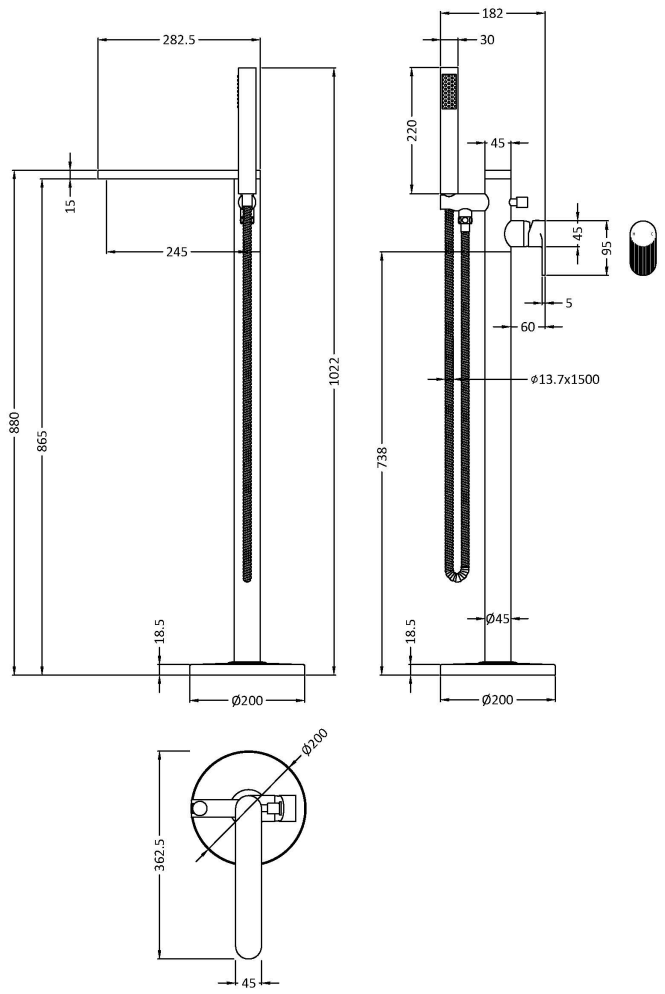


| | |
|---|---|
| **Product Dimensions** | |
| Height (mm): | 880 |
| Width (mm): | 200 |
| Depth (mm): | 282 |
| Length (mm): | |
| Nett Weight (kg): | 6.17 |
| **Packaging Dimensions** | |
| Height (mm): | 250 |
| Width (mm): | 400 |
| Depth (mm): | 980 |
| Gross Weight (kg): | 6.17 |
| **Packaging Data** | |
| Box Colour: | White Cardboard Box |
| Box Qty: | 1 |
| Label Size: | 100 x 50 |
| Label Colour: | White Label |
| Label Qty: | 1 |
| **Outer Box Dimensions (If Applicable)** | |
| Height (mm): | 500 |
| Width (mm): | 500 |
| Depth (mm): | 300 |
| Length (mm): | |
| Gross Weight (kg): | |
| Barcode: | 5056678478714 |
| **Product Details** | |
| Country of Origin: | China |
| Fitting Instruction: | No |
| Product Material: | Brass |
| Control Type: | Manual |
| Waste Included: | Waste Included |
| Waste Type: | Push Button |
| WRAS Approval: No | Approval No: N/A |
| Valve/Cartridge Type: | Single Lever Cartridge |
| Colour/Finish: | Chrome |
| Mount Type: | Deck |
| Operating Pressure (bar): | 0.2 |
| Flow Rates: (Litres Per Min) 0.1 bar: 2.9 | 0.5 bar: 7.7 1 bar: 11.2 2 bar: 16.1 3 bar: 20 |
| Pipe Size: | 1/2" |
| Pipe Centres: | N/A |